FAB40-4U

Data Sheet

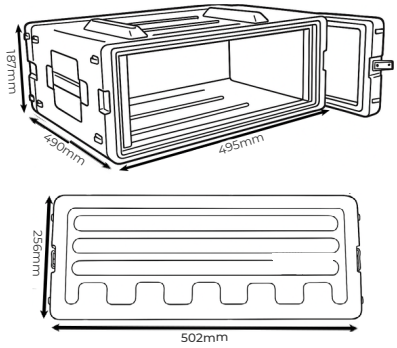

GENERAL INFORMATION

Model	FAB40-4U
ID	10315865
Brand	Audibax
EAN	8436850181125
Colour	Black
Intrastat	42021219
Country of Origin	China

GENERAL SPECIFICATIONS

Category	Rack Case
Type of Case	PE
External Dimensions (Width x Height x Depth)	502 x 256 x 570 mm
Internal Dimensions (Width x Height x Depth)	495 x 187 x 490 mm
Features	protection net on two lids
Rack Units (RU)	4U

PHYSICAL INFORMATION

IP Rating	IP20
Weight Single	6,5 Kg
Lenght Master	575 mm
Height Master	270 mm
Width Master	565 mm

PHYSICAL INFORMATION

Interior Padding & Protection	Net in the lid
Hardware & Fittings (Handles, Locks, Hinges)	2 High-security butterfly locks on each lid
Removable Covers (Front/Rear/Top)	2 Removable side covers
Accessibility & Ease of Use	Easy open lids
Handles & Grip Options	Dual handles for heavy loads
Stackability & Storage Features	Reinforced corners for secure stacking
Recommended Equipment & Applications	Professional audio equipment (mixers, amplifiers)
Customization Options & Modular Design	Modular systems for integration
Transport & Storage Recommendations	Avoid exposure to extreme shocks and vibrations
Safety Guidelines & Precautions	Secure all covers and latches before moving
Packaging Type & Material	Reinforced cardboard

WHAT IS IN THE BOX

1 x FAB40-4U
1 x Screw set